REV	SIGN	DATE	DESCRIPTION	APPROVER
D	1	01/27'07	The soldering temperature from 245°to 250°	Aaron
E	2	10/09'12	Update the drawing	Da cheng
F	3	04/19'13	Update the drawing	Jacky
G	4	02/06'17	Add the TUV safety certification and electrical specifications	Johnson
	5	02/06'17	Change the dimension from3.8 to 3.5	Johnson
H	6	07/16'17	remove the safety certification icon	Johnson
THIS IS CAD DRAWING, DO NOT REVISE MANUALLY!!!				

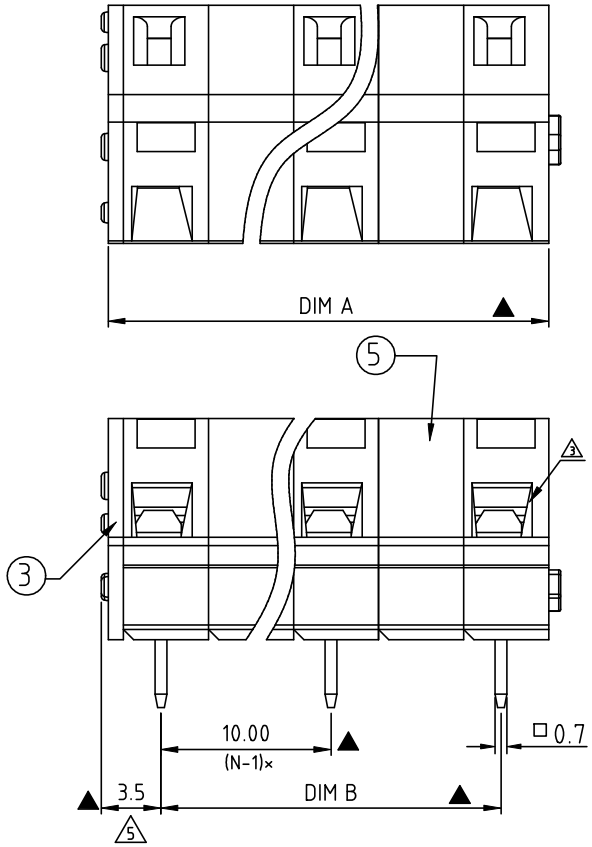

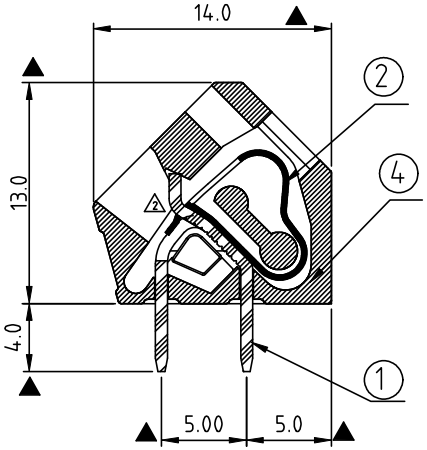

2 Material

- Item 1 Terminal body (Contact pin): Brass,Tin plated Bright Tin plated over Nickel plated
- Item 2 Spring clamp: Stainless steel
- Item 3 Terminal Cover: Thermoplastic (UL94V-0)
- Item 4 Terminal Body: Thermoplastic (UL94V-0)
- Item 5 Pad board: Thermoplastic (UL94V-0)

6 Electrical

	cULus
Voltage rating:	300V
Current rating:	15A
Wire range:	
Solid wire(AWG):	12-28
Stranded wire(AWG):	12-28
2 Wire strip length:	5-6mm
Withstanding Voltage:	1.6KV
2 Operating temperature:	-40°C to +115°C
2 1 Soldering temperature:	260°C±5°C/5 Sec
4 Safety Approval:	c UL us
Critical dimension: ▲	

HG xx 10 x 0 xxxx G

- xx: 02 2 CONTACTS; 03 3 CONTACTS; ... ...; 12 12 CONTACTS
- x: Color 2 3
  - 0 Black (RAL9005)
  - 2 Red (RAL3001/D)
  - 3 Orange(RAL2011/P)
  - 4 Yellow(RAL1018/A)
  - 5 Green(RAL6018/T)
  - 6 Blue (RAL5015/A)
  - 8 Grey(RAL7004/P)
  - 9 White(RAL1102)
  - C Multiple colors
- xxxx: 000 0 Standard @ Logo; 000 A Standard ANY Logo; Any special item by customer request, please contact sales department.
- G: RoHS compliant (lead<4%) In copper Alloy

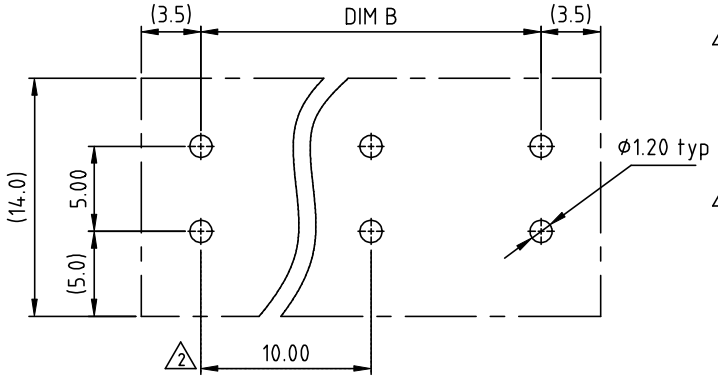

PCB. LAYOUT
2 Bottom view

2 Dimension

DIM A	(N-1)×10.0+5.9
DIM B	(N-1)×10.0

2 N=Number of poles

POLES	DIM B	DIM A
2p-4p	±0.15	±0.20
5p-7p	±0.20	±0.25
8p-10p	±0.25	±0.30
11p-12p	±0.30	±0.40

Amphenol ANYTEK

CUSTOMER COPY

ALL RIGHTS RESERVED. REPRODUCTION OR ISSUE TO THIRD PARTIES IN ANY FORM WHATEVER IS NOT PERMITTED WITHOUT WRITTEN AUTHORITY FROM THE PROPRIETOR. PROPERTY OF ANYTEK TECHNOLOGY CO., LTD

TITLE	HG 10.0mm Series				
PART NO.	HGxx10x00000G			DWG NO.	8HG0401
APPROVED	CHECKED	DESIGNED	DRAWN	CUST NO.	
		Johnson 2017.02.06	Johnson 2017.02.06	UNIT: mm / SCALE: NONE / SHEET: 01/01 / REV.: H	

Tolerance	
X.	±0.50
X.X	±0.30
X.XX	±0.10
X°	±1°