RoHs Compliant

| REV | SIGN | DATE | DESCRIPTION | APPROVER |
|---|---|---|---|---|
| | | | | |
| | | | | |
| | | | | |

*THIS IS CREO DRAWING, DO NOT REVISE MANUALLY!!!*

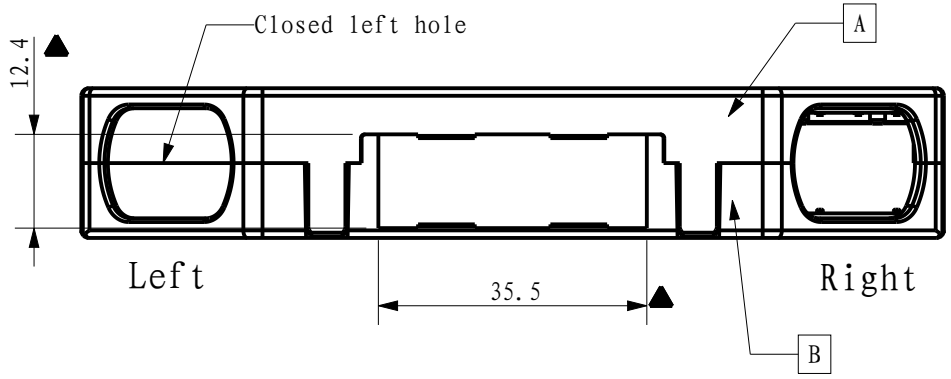


Material:
Item A Terminal Left body: ABS (UL94-HB)
Item B Terminal Right body: ABS (UL94-HB)

Critical dimension: ▲

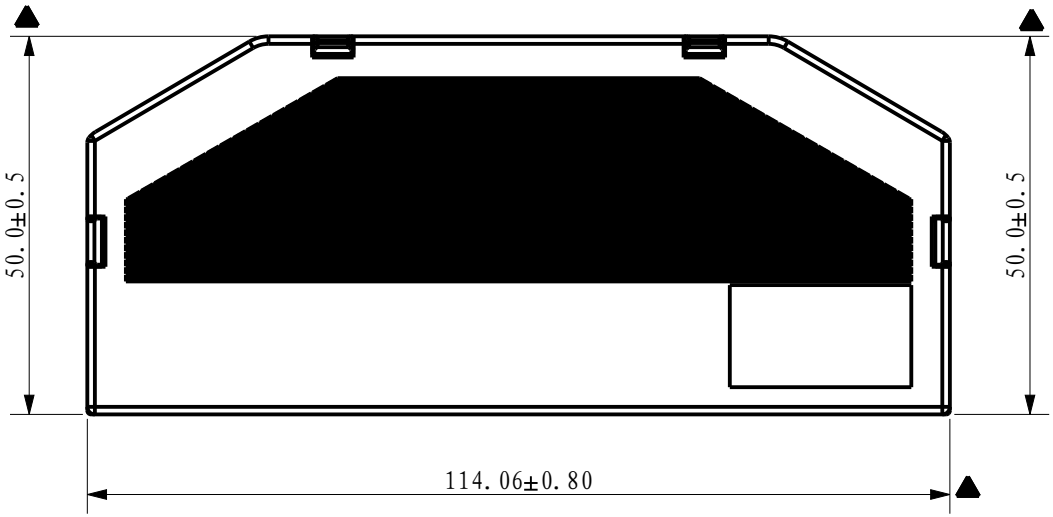


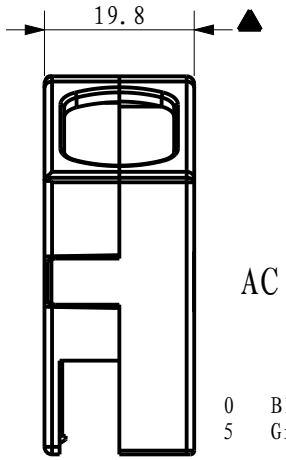


AC 22 5 0 x 0 xxxx G

Color
0 Black (RAL9005)
5 Green(RAL6018/T)

0:Closed left hole

G RoHS compliant (lead<4%) In copper Alloy
0000 Standard @ Logo
000A Standard ANY Logo
Any special item by customer request, please contact sales department.

Amphenol ANYTEK

CUSTOMER COPY

ALL RIGHTS RESERVED. REPRODUCTION OR ISSUE TO THIRD PARTIES IN ANY FORM WHATEVER IS NOT PERMITTED WITHOUT WRITTEN AUTHORITY FROM THE PROPRIETOR. PROPERTY OF ANYTEK TECHNOLOGY CO., LTD

| | | | | | |
|---|---|---|---|---|---|
| TITLE: | AC 5.08 22P Terminal Box(Match HW5.08 22P with flange,Contact on down side) | | | | |
| PART NO. | AC2250x0xxxxG | | | DWG NO. | 8AC0001 |
| APPROVED | CHECKED | DESIGNED | DRAWN | CUST NO. | |
| | | Chen Bo 06/25-21 | Chen Bo 06/25-21 | SHEET: 1 /1 | UNIT: mm<br>SCALE: 1.000<br>REV.: A0 |

Tolerance
X. ±0.5
X.X ±0.3
X.XX ±0.1
X° ±1°