RoHS Compliant

Rev	SIGN	DATE	DESCRIPTION	APPROVER
C	1	2009.07.17	The part No and drawing No are changed	Jacke
D	2	2010.05.29	Add cULus standard	Jacke
E	3	2012.03.10	Update the drawing,Add the inspection dimension	PansLee
			THIS IS CAD DRAWING, DO NOT REVISE MANUALLY!!!	

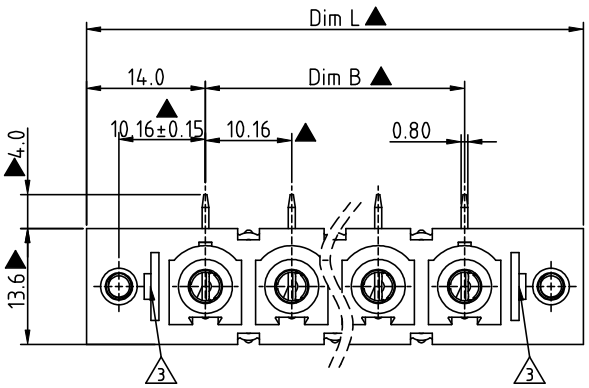

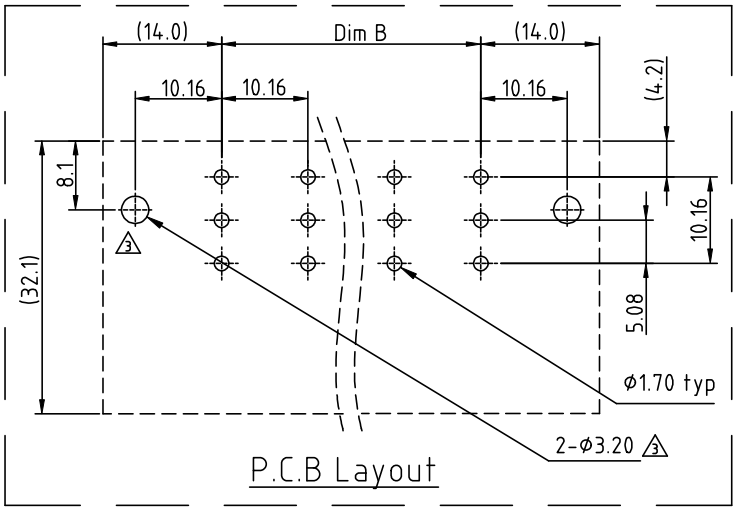

P.C.B Layout

Material:

- Item a Terminal(housing): PA66 (UL 94 - V0)
- Item b Male contact pin: Copper Tin plated
- Item c Wire guard:Stainless Steel
- Item d With flange nut : Steel zinc plated M3

Electrical:	cULus	IEC
Voltage rating:	300V	1000V
Current rating:	55A	76A
Withstanding Voltage:	1.6 KV	
3 Rated impulse voltage		8 KV

- Operating temperature:-40°C to +115°C
- Soldering temperature:260°C±5°C/5 Sec
- 2 Safety Approval: c UL us
- 3 Critical dimension: ▲

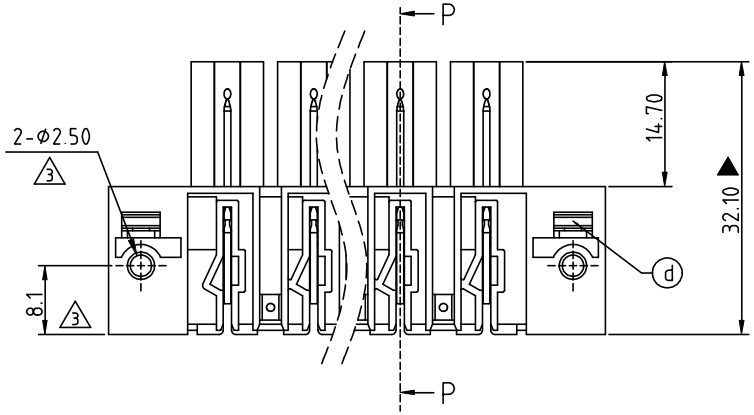

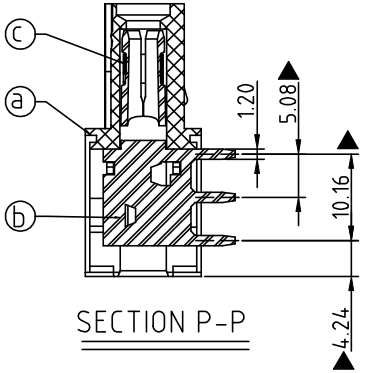

SECTION P-P

PART NO.

KL xx 62 x 2 xxxx G

No. OF POLES
02 2 CONTACTS
03 3 CONTACTS
... ...
12 12 CONTACTS

Color
0 Black (RAL9005)
2 Red (RAL3001/D)
3 Orange(RAL2011/P)
4 Yellow(RAL1018/A)
5 Green(RAL6018/T)
6 Blue (RAL5015/A)
8 Grey(RAL7035/D)

RoHS compliant (lead<4%) In copper Alloy

0000: "@" Logo (Standard)
000A: "ANYTEK" Mark
Any special item by customer requst. please contact sales department.

Poles	02	03	04	05	06	07	08	09	10	11	12
Dim L	38.08	48.24	58.40	68.56	78.72	88.88	99.04	109.20	119.36	129.52	139.68
Dim B	10.16	20.32	30.48	40.64	50.80	60.96	71.12	81.28	91.44	101.60	111.76
TOL	±0.25					±0.35					

Amphenol ANYTEK

CUSTOMER COPY

ALL RIGHTS RESERVED. REPRODUCTION OR ISSUE TO THIRD PARTIES IN ANY FORM WHATEVER IS NOT PERMITTED WITHOUT WRITTEN AUTHORITY FROM THE PROPRIETOR. PROPERTY OF ANYTEK TECHNOLOGY CO., LTD

TITLE	KL10.16 Series 2p-12p Right -Angle W/F ange (up)				
PART NO.	KLxx62x2xxxxG 1			PART NO.	8KL0005 1
APPROVED	CHECKED	DESIGNED	DRAWN	CUST NO.	
		PansLee 2024.06.03	PansLee 2024.06.03	UNIT: mm	
				SCALE: NONE	
				SHEET: 01/01	REV.: E

Tolerance	
X.	±0.50
X.X	±0.30
X.XX	±0.10
X°	±1°