SIGN	DATE	DESCRIPTION	APPROVER
1	2009.03.31	Add the inspection dimension	Jacke
2	2010.05.30	Add cULus standard	Jacke
		THIS IS CAD DRAWING, DO NOT REVISE MANUALLY!!!	

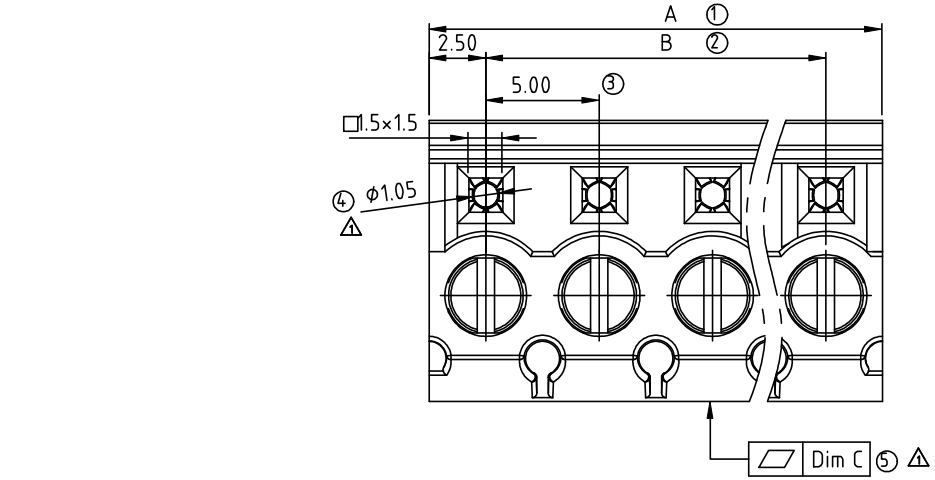

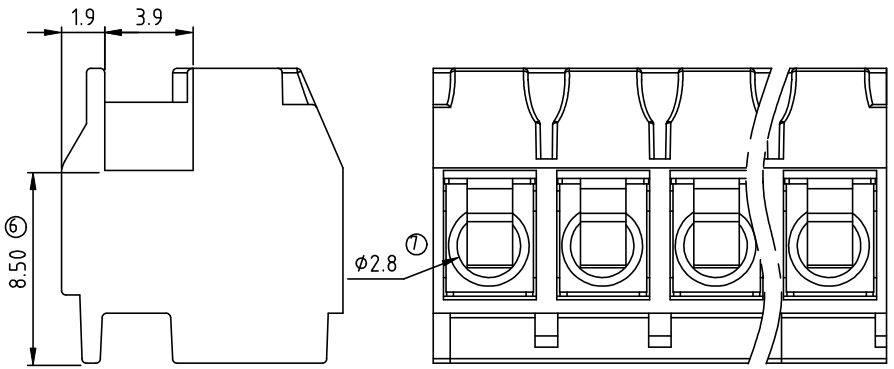

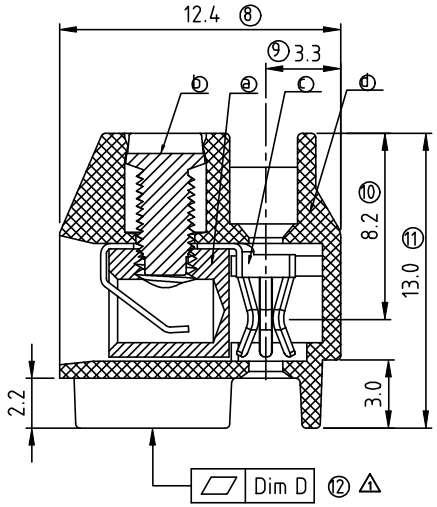

Material

- Item ⓐ Clamp: Brass(CuZn) Ni plated
- Item ⓑ Terminal screw: Steel Zinc plating "-" slot type
- Item ⓒ Female contact: PhBz (CuSn) Tin plated
- Item ⓓ Terminal (housing): Thermoplastic (UL94V-0)

Electrical cULus

- Voltage rating: 300V
- Current rating: 10A
- Wire range:
- Solid wire(AWG): 14-26
- Stranded wire(AWG): 14-26
- Torque: 3.5Lb-In
- Screw: M2.6
- Wire strip length: 5-6mm
- Withstanding Voltage: 1.6KV
- Operating temperature:-40°C to+115°C
- 2 Safety Approval: cULus

KR xx 01 x 0 xxxx G

Poles
- 02 2Contacts
- 03 3Contacts
- 24 24Contacts

- 0 Black (RAL9005)
- 2 Red (RAL3001/D)
- 3 Orange(RAL2011/P)
- 4 Yellow(RAL1018/A)
- 5 Green(RAL6018/T)
- 6 Blue (RAL5015/A)
- 8 Grey(RAL7035/D)

- 0000 Standard @ Logo
- 000A Standard ANY Logo
- Any special item by customer request, please contact sales department.

- RoHS Pb<40,000ppm

N = Number of poles
Dim A=Nx5.0
Dim B=(N-1)x5.0

	Dim A	Dim B	Dim C	Dim D
2P	±0.05	±0.05	≤0.05	≤0.05
3-6p	±0.15	±0.15	≤0.10	≤0.10
7-12p	±0.20	±0.20	≤0.20	≤0.20
13-18p	±0.30	±0.30		
19-24p	±0.40	±0.40	≤0.40	≤0.40

Amphenol ANYTEK

CUSTOMER COPY

ALL RIGHTS RESERVED. REPRODUCTION OR ISSUE TO THIRD PARTIES IN ANY FORM WHATEVER IS NOT PERMITTED WITHOUT WRITTEN AUTHORITY FROM THE PROPRIETOR. PROPERTY OF ANYTEK TECHNOLOGY CO., LTD

TITLE	KR 5.0mm Series "- " (Without hook)				
PART NO.	KRxx01x0xxxxG			DWG NO.	8KR0001
APPROVED	CHECKED	DESIGNED	DRAWN	CUST NO.	
		Jacke 2010.05.30	Jacke 2009.03.31	UNIT: mm / SCALE: NONE / SHEET: 01/01	REV.: D

Tolerance	
X.	±0.50
X.X	±0.30
X.XX	±0.10
X°	±1°