RoHS Compliance

REV.	SIGN	DATE	DESCRIPTION	APPROVER
B		9/25'13	The first release	Da cheng
C	△1	12/28'13	update the drawing	Da cheng
D	△2	11/21`22	Add Safety Approval TUV	Johnson

THIS IS CAD DRAWING, DO NOT REVISE MANUALLY!!!

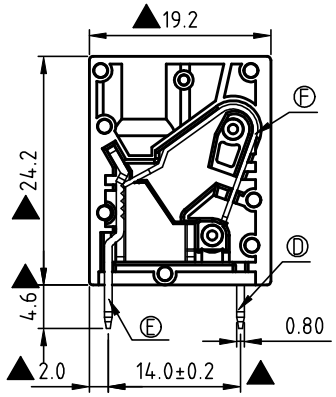

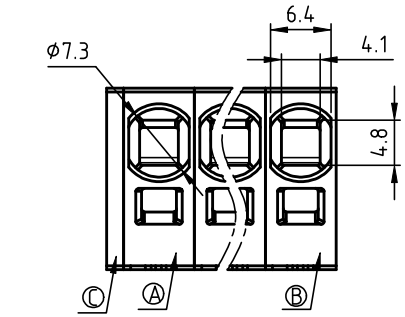

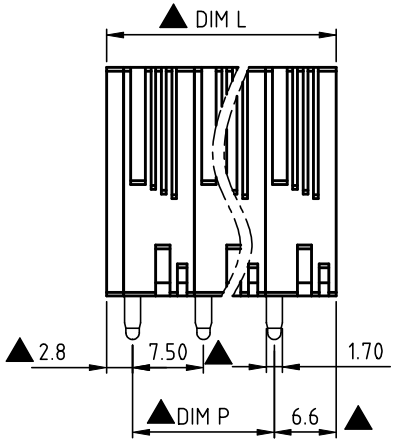

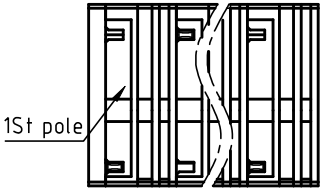

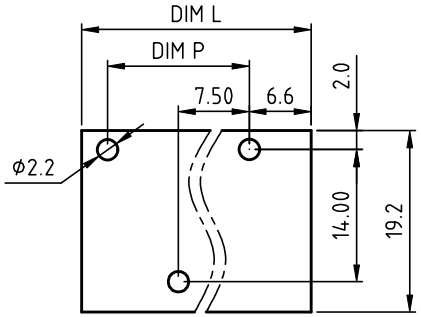

P.C.B Layout
Top view

Material:

- Item Ⓐ Terminal body: Thermoplastic (UL94V-0)
- Item Ⓑ Terminal side body: Thermoplastic (UL94V-0)
- Item Ⓒ Terminal cover: Thermoplastic (UL94V-0)
- Item Ⓓ Contact pin : Copper, Tin Plated.
- Item Ⓔ Contact pin : Copper, Tin Plated.
- Item Ⓕ Spring clamp : Stainless steel

△2 Electrical:	cULus	TUV(EN/IEC60998-2-2)
Voltage rating:	300 V	1000 V
Current rating(Sol):	30 A	41 A
Current rating(Str):	35 A	41 A
Solid wire(AWG):	10-24	$0.2mm^2$-$10mm^2$ (IEC)
Stranded wire(AWG):	8-24	$0.2mm^2$-$6mm^2$ (IEC)
Wire strip length:	15-16 mm	
Withstanding Voltage:	1.6KV	3.5KV
Operating temperature:	-40°C to +120°C	
Soldering temperature:	260°C±5°C/5 Sec	
Safety Approval:	c UL us	△2
Critical dimension:	▲	

NK xx A 0 x 2 xxxx G

△1 No. OF POLES
01: 1POLES
03: 3 POLES
:
15: 15 POLES

Body Color
0 Black (RAL9005)
2 Red (RAL3001/D)
3 Orange(RAL2011/P)
4 Yellow(RAL1018/A)
5 Green(RAL6018/T)
6 Blue (RAL5015/A)
8 Grey(RAL7004/P)
9 White(RAL1102)
C Multiple colors

RoHS compliant (lead<4%)
In copper Alloy
0000: "@" Logo (Standard)
000A: "ANYTEK" Mark
Any special item by customer requst. please contact sales department.

△1 N=NUMBER OF POLES

DIM		TOL		
		1P--5P	7P--11P	13P--15P
Dim P	(N-1)×7.5	±0.15	±0.25	±0.35
Dim L	N×7.5+1.8	±0.15	±0.25	±0.35

Amphenol ANYTEK

CUSTOMER COPY

ALL RIGHTS RESERVED. REPRODUCTION OR ISSUE TO THIRD PARTIES IN ANY FORM WHATEVER IS NOT PERMITTED WITHOUT WRITTEN AUTHORITY FROM THE PROPRIETOR. PROPERTY OF ANYTEK TECHNOLOGY CO., LTD

TITLE	NK 7.5mm Series Vertical (Single tail C type)(第1P為右缺脚子靠邊蓋) 單數P				
PART NO.	NKxxA0x2xxxxG			DWG NO.	8NK0005
APPROVED	CHECKED	DESIGNED	DRAWN	CUST NO.	
		Johnson 2022.12.21	Johnson 2022.12.21	UNIT: mm	
				SCALE: NONE	
				SHEET: 01/01	REV.: D

Tolerance	
X.	±0.50
X.X	±0.30
X.XX	±0.10
X°	±1°