RoHS Compliant

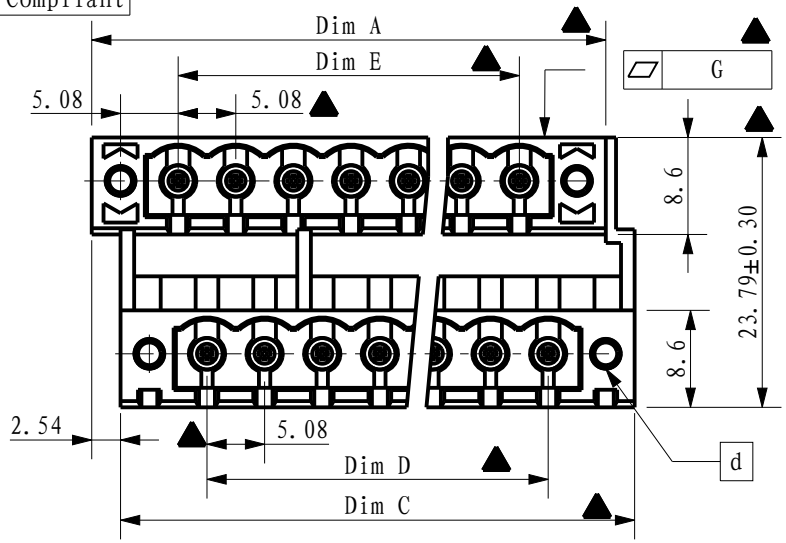

Ranges in nominal Lengths in mm	▱ G/H
Up to 10	0.1
over 10 up to 30	0.2
over 30 up to 100	0.4
over 100 up to 300	0.8

REV	SIGN	DATE	DESCRIPTION	APPROVER
B		07/15-22	Initial release	Chen Bo
C	⚠	02/28-25	Add the cULus mark	Chen Bo

THIS IS CREO DRAWING, DO NOT REVISE MANUALLY!!!

Material:
Item A Terminal housing: Thermoplastic (UL94V-0)
Item B Long pin-1 :Copper ,Bright Tin plated over Nickel plated
Item C Short pin-2 :Copper ,Bright Tin plated over Nickel plated
Item D With flange nut: brass M2.5

Electrical: cULus
Voltage rating: 300V
⚠ Current rating: 15A
Withstanding Voltage: 1.6Kv
Operating temperature: -40℃ to +115℃
Wave soldering temperature: 260℃±5℃/5 Sec
⚠ Safety approval: c[redacted]us
Critical Dimensions: ▲

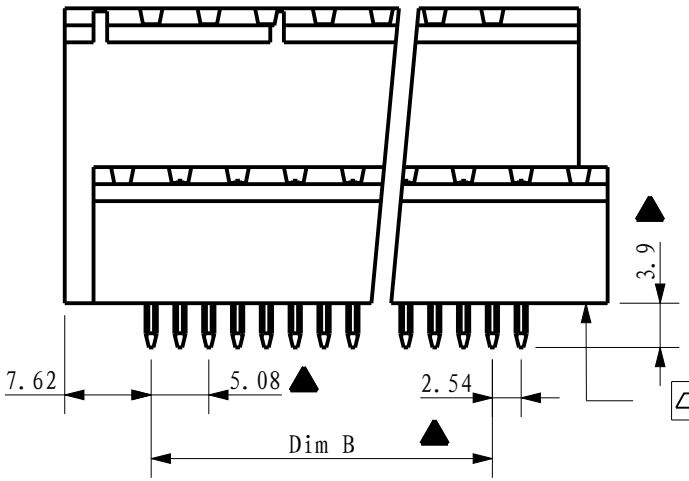

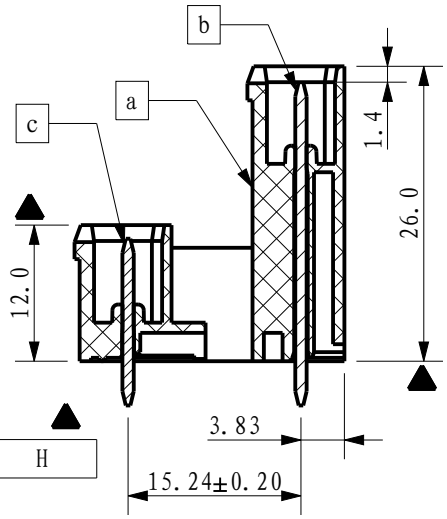

VF xx 5 4 x 0 xxxx G

No. OF POLES
04: 2*2 POLES
06: 2*3 POLES
...
36: 2*18 POLES

Color
0 Black (RAL9005)
2 Red (RAL3001/D)
3 Orange (RAL2011/P)
4 Yellow (RAL1018/A)
5 Green (RAL6018/T)
6 Blue (RAL5015/A)
8 Grey (RAL7035/D)
9 White (RAL1102)
C Green (RAL6018/U)

0000 Standard @ Logo
000A Standard ANY Logo
Any special item by customer request, please contact sales department.

G RoHS compliant (lead<4%) In copper Alloy

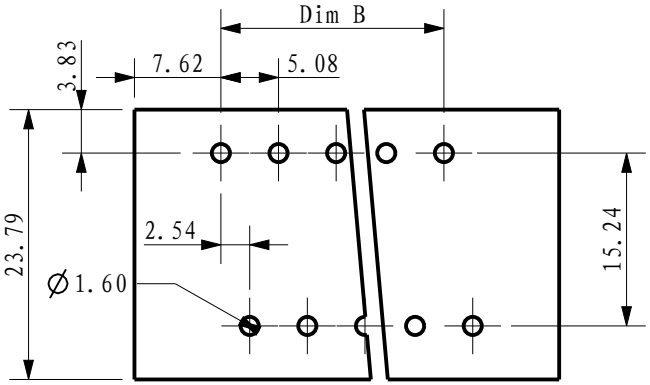

RECOMMENDED PCB LAYOUT

N=Number of poles

Dim A / C	(N/2-1)x5.08+15.24
Dim B / D / E	(N/2-1)x5.08

Poles	Dim A/B/C/D/E Tol
2*2P-2*5P	+0.15/-0.15
2*6P-2*10P	+0.20/-0.20
2*11P-2*15P	+0.25/-0.25
2*16P-2*18P	+0.30/-0.30

Amphenol ANYTEK

CUSTOMER COPY

ALL RIGHTS RESERVED. REPRODUCTION OR ISSUE TO THIRD PARTIES IN ANY FORM WHATEVER IS NOT PERMITTED WITHOUT WRITTEN AUTHORITY FROM THE PROPRIETOR. PROPERTY OF ANYTEK TECHNOLOGY CO., LTD

TITLE:	VF 5.08 With flange (High Type) 2*2P-2*18P Vertical series				
PART NO.	VFxx54x0xxxxG			DWG NO.	8VF0A01
APPROVED	CHECKED	DESIGNED	DRAWN	CUST NO.	
		Chen Bo 02/28-25	Chen Bo 04/28-21	SHEET: 1 /1	UNIT: mm SCALE: 1.500 REV.: C

Tolerance: X. ±0.5, X.X ±0.3, X.XX ±0.1, X° ±1°