SIGN	DATE	DESCRIPTION	APPROVER
⚠1			
THIS IS CAD DRAWING, DO NOT REVISE MANUALLY!!!			

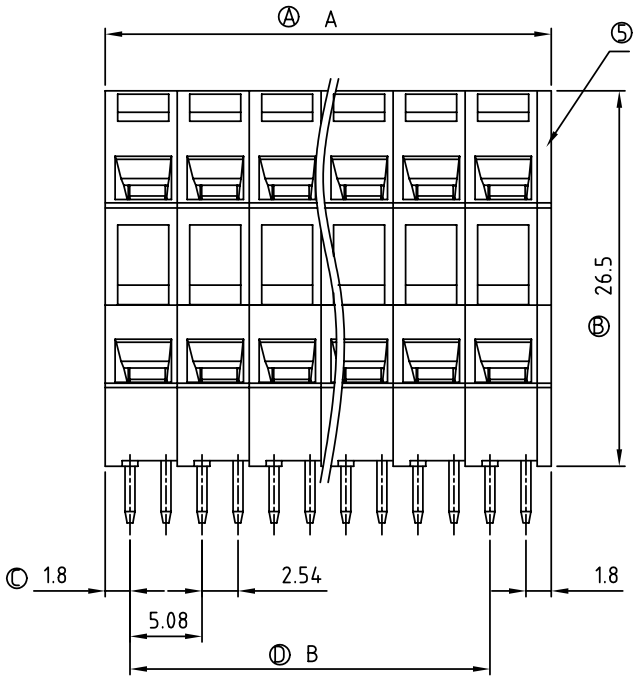

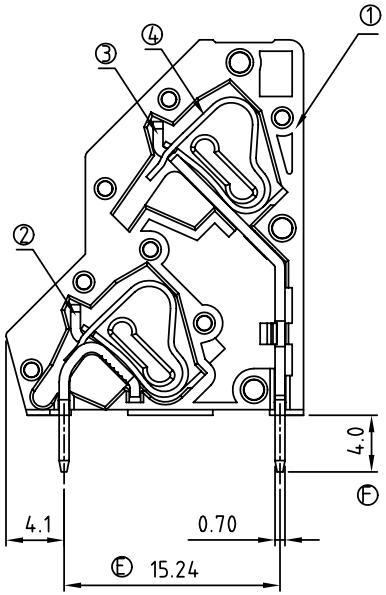

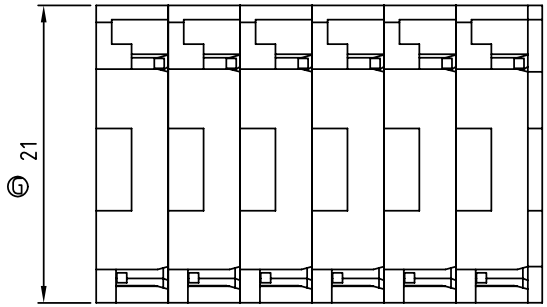

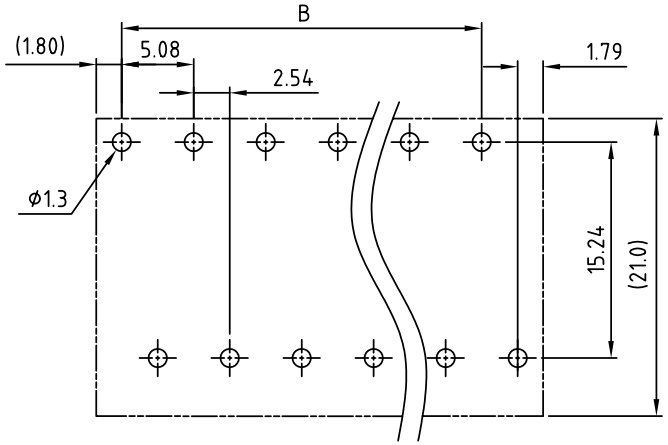

Material

- Item ① Terminal body: Thermoplastic (UL94V-0)
- Item ② Spring clamp of short : Brass Tin plated.
- Item ③ Spring clamp of long : Brass Tin plated.
- Item ④ Spring clamp: Stainless steel
- Item ⑤ Terminal cover : Thermoplastic (UL94V-0)

Electrical:	cULus
Voltage rating:	300V
Current rating:	10A
Wire range:	
Solid wire(AWG):	12-28
Stranded wire(AWG):	12-28
Wire strip length:	5-6mm
Withstanding Voltage:	1.6KV
Operating temperature:	-40°C to +115°C
Soldering temperature:	250°C±10°C/5 Sec
⚠1 Safety Approval:	c UL us

HQ xx 30 x 1 xxxx G

- xx: Poles
  - 04 2×2Poles
  - 06 2×2Poles
  - ...
  - 48 2×24Poles
- 30: Color
  - 0 Black
  - 5 Green
  - 6 Blue
  - 8 Grey
- 1:
- xxxx:
  - 0000 Standard @ Logo
  - 000A Standard ANY Logo
  - Any special item by customer request, please contact sales department.
- G: RoHS Pb<40,000ppm

P=Number of Poles

POLE		2x2	2x3	2x4	2x5	2x6	2x7	2x8	2x9	2x10	2x11	2x12
A		11.16	16.24	21.32	26.40	31.48	36.56	41.46	46.72	51.80	56.88	61.96
B		5.08	10.16	15.24	20.32	25.40	30.48	35.56	40.64	45.72	50.80	55.88
Tol.		±0.10					±0.15					
POLE	2x13	2x14	2x15	2x16	2x17	2x18	2x19	2x20	2x21	2x22	2x23	2x24
A	67.04	72.12	77.20	82.28	87.36	92.44	97.52	102.60	107.68	112.76	117.84	122.92
B	60.96	66.04	71.12	76.20	81.28	86.36	91.44	96.52	101.60	106.68	111.76	116.84
Tol.	±0.20			±0.30								

ANYTEK

CUSTOMER COPY

ALL RIGHTS RESERVED. REPRODUCTION OR ISSUE TO THIRD PARTIES IN ANY FORM WHATEVER IS NOT PERMITTED WITHOUT WRITTEN AUTHORITY FROM THE PROPRIETOR. PROPERTY OF ANYTEK TECHNOLOGY CO., LTD

TITLE	HQ 5.08mm Series (Solder pins staggered by half the pin spacing)					
PART NO.	HQxx30x1xxxxG			DWG NO.	8HQ0101	
APPROVED	CHECKED	DESIGNED	DRAWN	CUST NO.		Tolerance
		Runner 2010.05.13	Runner 2010.05.13		UNIT: mm	X. ±0.50
					SCALE: NONE	X.X ±0.30
				SHEET: 01/01	REV.: C	X.XX ±0.10
						X° ±1°