SIGN	DATE	DESCRIPTION	APPROVER
⚠			

THIS IS CAD DRAWING, DO NOT REVISE MANUALLY!!!

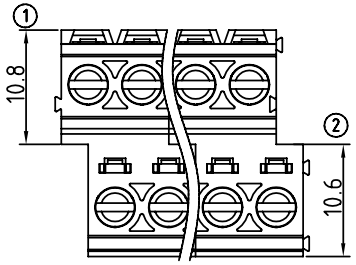

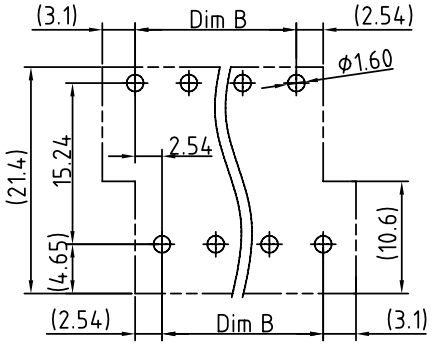

P.C.B LAYOUT

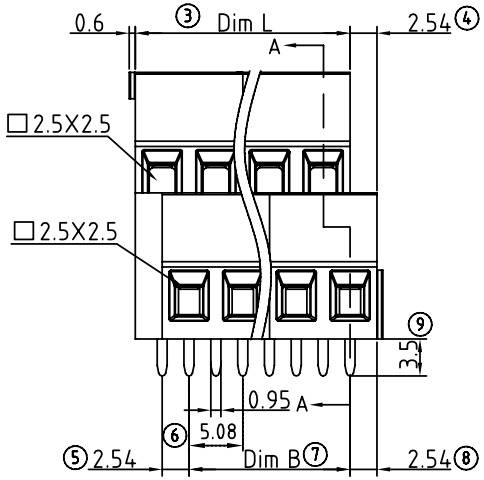

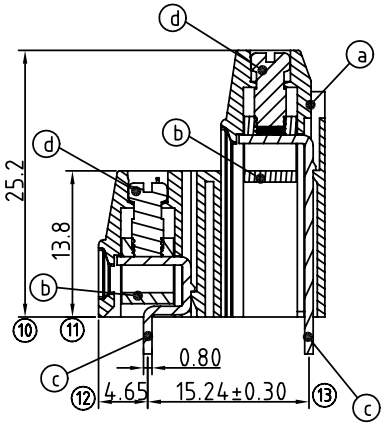

SECTION A-A

Material

- Item a Terminal housing :Thermoplastic (UL 94V-0)
- Item b Clamp : Brass , Ni plated
- Item c Wire guard solder pin :Brass ,Tin plated
- Item d Terminal screw: Copper alloy "-"slot type Ni plated

Electrical cULus

- Voltage rating: 300VAC
- Current rating: 20A
- Wire range:
- Solid wire(AWG): 12-22
- Stranded wire(AWG): 12-22
- Torque(Lb-In): 5.0
- Screw: M3.0
- Wire strip length: 6-7mm
- Withstanding Voltage: 1.6KV
- Operating temperature: -40°C to +115°C
- Soldering temperature: 250°C±10°C/5 Sec
- Safety Approval: c UL us

YL xx 61 x 1 xxxx G

- xx: No. of poles end stackable design
  - 04 2×2P CONTACTS
  - 06 2×3P CONTACTS
  - ... ...
  - 48 2×24P CONTACTS
- 61: 0 Black (RAL9005); 2 Red (RAL3001/D); 3 Orange(RAL2011/P); 4 Yellow(RAL1018/A); 5 Green(RAL6018/T); 6 Blue (RAL5015/A); 8 Grey(RAL7035/D)
- xxxx: 0000:"@"Logo (Standard); 000A:"ANYTEK"Logo; Any special item by customer request, please contact sales department.
- G: RoHS Pb<40,000ppm

N = 1/2Number of poles.
Dim.L= N × 5.08
Dim.B= (N-1) × 5.08

Dim \ Poles	2×2P-2×6P	2×7P-2×12P	2×13P-2×18P	2×19P-2×24P
Dim.L	±0.20	±0.30	±0.35	±0.45
Dim.B	±0.20	±0.25	±0.30	±0.40

ANYTEK

CUSTOMER COPY

ALL RIGHTS RESERVED. REPRODUCTION OR ISSUE TO THIRD PARTIES IN ANY FORM WHATEVER IS NOT PERMITTED WITHOUT WRITTEN AUTHORITY FROM THE PROPRIETOR. PROPERTY OF ANYTEK TECHNOLOGY CO., LTD

TITLE	YL-5.08mm Series "-" Right Solid block				
PART NO.	YLxx61x1xxxxG			DWG NO.	8YL0401
APPROVED	CHECKED	DESIGNED	DRAWN	CUST NO.	
		Kind 2009.10.06	Kind 2009.06.22	UNIT: mm / SCALE: NONE / SHEET: 01/01 / REV.: B	

Tolerance	
X.	±0.50
X.X	±0.30
X.XX	±0.10
X°	±1°