SIGN	DATE	DESCRIPTION	APPROVER
1	2010.10.23	Add UL standard	Jacke
2	2010.10.23	The material is changed from Brass to copper	Jacke
		THIS IS CAD DRAWING, DO NOT REVISE MANUALLY!!!	

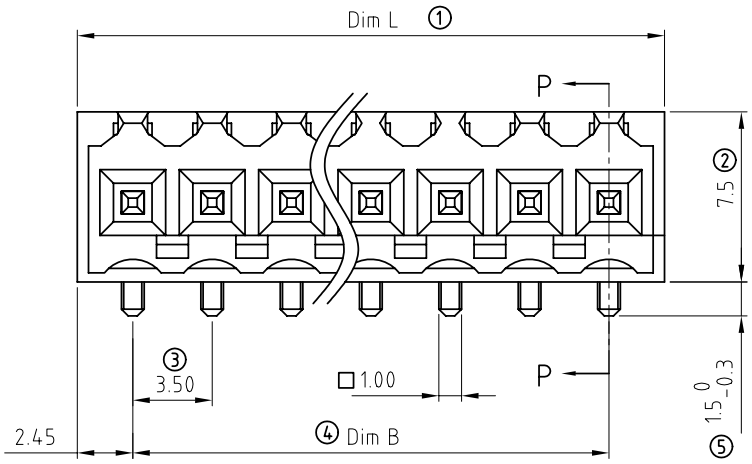

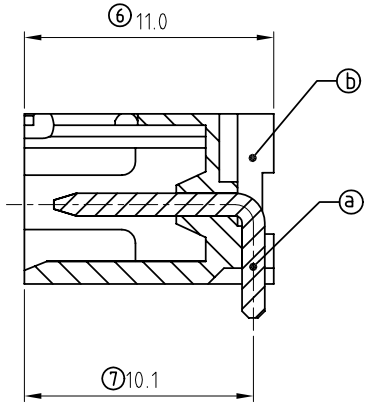

SECTION P-P

Material

- 2 Item ⓐ Male contact pin: Copper,Tin plated.
- Item ⓑ Terminal (housing): PA6T 30%GF(UL94V-0)

Electrical cULus / IEC

- Voltage rating: 300V/160V
- Current rating: 10A/13A
- Withstanding Voltage: 1.6KV/2.5KV
- Operating temperature: -40°C to +130°C
- Soldering temperature: 280°C/10 Sec
- 1 Safety Approval: c UL us

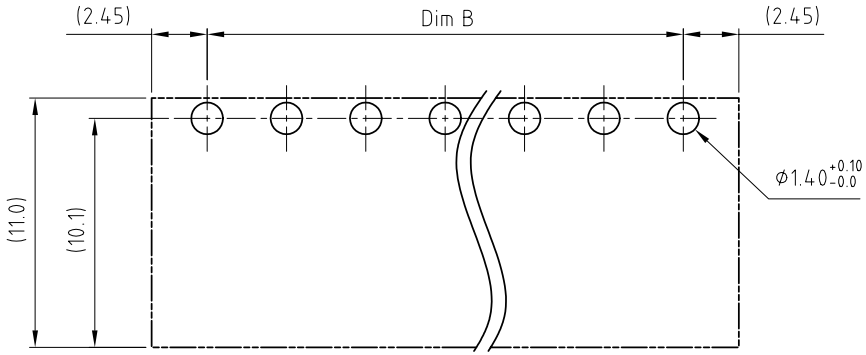

RECOMMENDED PCB LAYOUT

EL xx 12 x 1 xxxx G

- xx: 02 2 POLES; 03 3 POLES; ... ...; 24 24 POLES
- x: Color; 0 Black (RAL9005)
- xxxx: 000 0 @ Logo; 000 A ANY Logo; Any special item by customer request, please contact sales department.
- G: Pb < 40,000ppm (RoHS)

Poles	2p	3p	4p	5p	6p	7p	8p	9p	10p	11p	12p	13p
Dim L	8.40	11.9	15.4	18.9	22.4	25.9	29.4	32.9	36.4	39.9	43.4	46.9
Dim B	3.50	7.00	10.5	14.0	17.5	21.0	24.5	28.0	31.5	35.0	38.5	42.0
TOL	±0.15					±0.20						±0.25
Poles	14p	15p	16p	17p	18p	19p	20p	21p	22p	23p	24p	
Dim L	50.4	53.9	57.4	60.9	64.4	67.9	71.4	74.9	78.4	81.9	85.4	
Dim B	45.5	49.0	52.5	56.0	59.5	63.0	66.5	70.0	73.5	77.0	80.5	
TOL	±0.25					±0.30						

ANYTEK

CUSTOMER COPY

ALL RIGHTS RESERVED. REPRODUCTION OR ISSUE TO THIRD PARTIES IN ANY FORM WHATEVER IS NOT PERMITTED WITHOUT WRITTEN AUTHORITY FROM THE PROPRIETOR. PROPERTY OF ANYTEK TECHNOLOGY CO., LTD

TITLE	EL 3.5mm Right angle SMT TYPE Series				
PART NO.	ELxx12x1xxxx G			DWG NO.	8EL0003
APPROVED	CHECKED	DESIGNED	DRAWN	CUST NO.	
		Jacke 2010.10.25	Jacke 2010.10.25	UNIT: mm	
				SCALE: NONE	
				SHEET: 01/01	REV.: C

Tolerance	
X.	±0.50
X.X	±0.30
X.XX	±0.10
X°	±1°