SIGN	DATE	DESCRIPTION	APPROVER
1	03/29`12	Add is cULus	Chen Bo
2	03/29`12	The dimension D & E are added	Chen Bo
3	03/29`12	Flange nut is changed	Chen Bo

THIS IS CAD DRAWING, DO NOT REVISE MANUALLY!!!

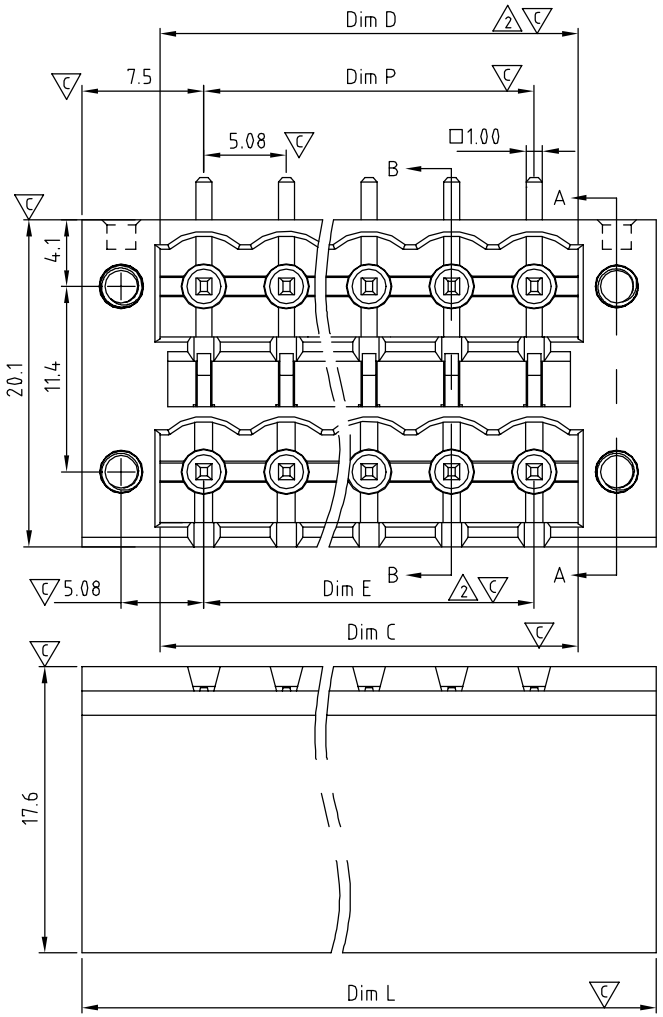

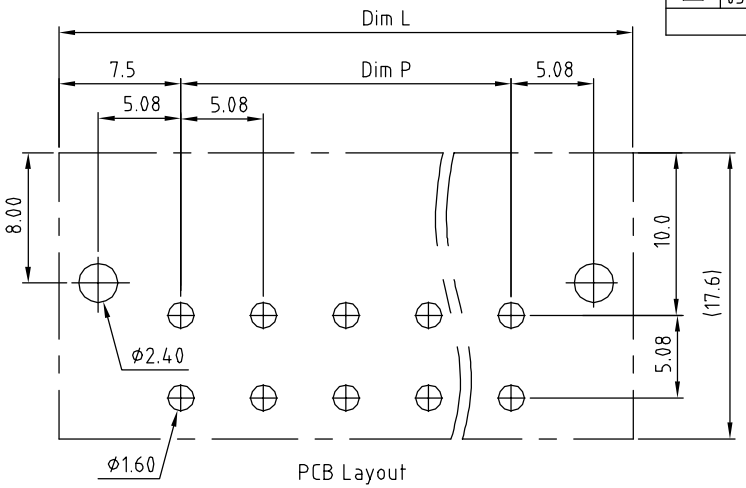

PCB Layout

Material:
- Item a Terminal(housing): Thermoplastic (UL94V-0)
- Item b Terminal(cover): Thermoplastic (UL94V-0)
- Item c Male contact pin of short: Copper Tin plated
- Item d With flange nut: Brass M2.5

Electrical: cULus
- Voltage rating: 300V
- Current rating: 12A
- Withstanding Voltage: 1.6KV
- Operating temperature: -40°C to +115°C
- Soldering temperature: 250°C ±10°C/5 Sec
- Safety Approval: c UL us
- Critical dimension:

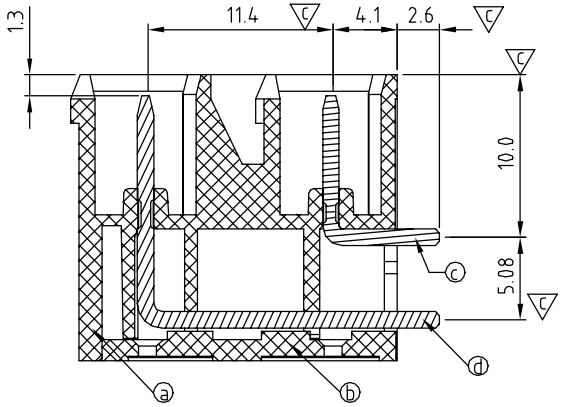

SECTION B-B

KE xx 5 2 x 3 xxxx G

No. OF POLES
04: 2×2 POLES
06: 2×3 POLES
48: 2×24 POLES

COLOR
0 Black (RAL9005)
2 Red (RAL3001/D)
3 Orange(RAL2011/P)
4 Yellow(RAL1018/A)
5 Green(RAL6018/T)
6 Blue (RAL5015/A)
8 Grey(RAL7035/D)
9 White(RAL1102)
C Green(RAL6018/U)

0000: "@" Logo (Standard)
000A: "ANYTEK" Mark
Any special item by customer requst. please contact sales department.

G RoHS compliant (lead<4%) In copper Alloy

N = Number of poles
Dim L=(N+1)×5.08+4.84
Dim P=(N-1)×5.08
Dim C=(N-1)×5.08+5.4
Dim D=(N-1)×5.08+5.4
Dim E=(N-1)×5.08

Poles	Dim L	Dim P	Dim C	Dim D	Dim E
2×2-2×6p	±0.15	±0.15	+0.05 -0.05	+0.05 -0.05	±0.15
2×7-2×12p	±0.25	±0.25	+0.10 -0.05	+0.10 -0.05	±0.25
2×13-2×18p	±0.35	±0.35	+0.20 -0.05	+0.20 -0.05	±0.35
2×19-2×24p	±0.40	±0.40	+0.25 -0.10	+0.25 -0.10	±0.40

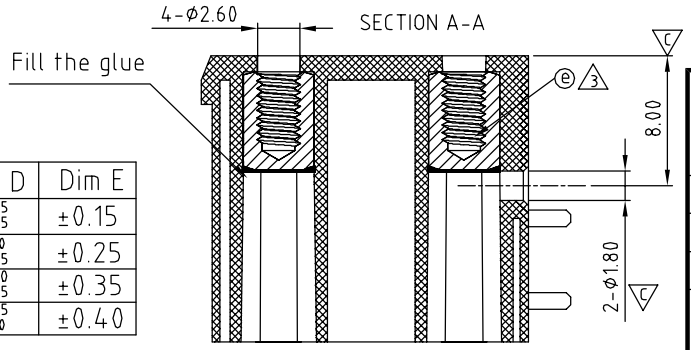

ANYTEK

CUSTOMER COPY

ALL RIGHTS RESERVED. REPRODUCTION OR ISSUE TO THIRD PARTIES IN ANY FORM WHATEVER IS NOT PERMITTED WITHOUT WRITTEN AUTHORITY FROM THE PROPRIETOR. PROPERTY OF ANYTEK TECHNOLOGY CO., LTD

TITLE	KE 5.08mm With Flange Series (Right angle) DIP TYPE				
PART NO.	KExx52x3xxxxG			DWG NO.	8KE0209
APPROVED	CHECKED	DESIGNED	DRAWN	CUST NO.	
		Chen Bo 03/29`12	Chen Bo 03/29`12	UNIT: mm / SCALE: NONE	
				SHEET: 01/01	REV.: C

Tolerance	
X.	±0.50
X.X	±0.30
X.XX	±0.10
X°	±1°