SIGN	DATE	DESCRIPTION	APPROVER
1	11/25'09	The Grey code changed from RAL7004/P to RAL7035/D	Kind
2	04/07'10	Add the Layout of Hook and Pillar	Runner
3	06/30'10	Add the "cULus"	Runner
4	05/07'11	The dimensions is Changed from 26.3 &14.5 to 26.5 &14.7	Chen Bo
5	08/22'12	Update the drawing	Dacheng
6	10/16'13	update the drawing	Da cheng

THIS IS CAD DRAWING, DO NOT REVISE MANUALLY!!!

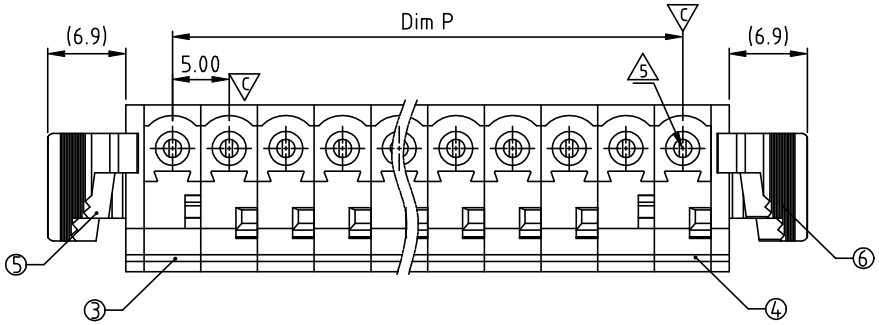

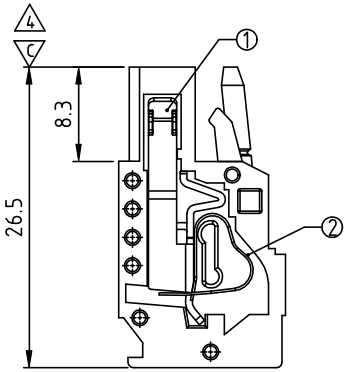

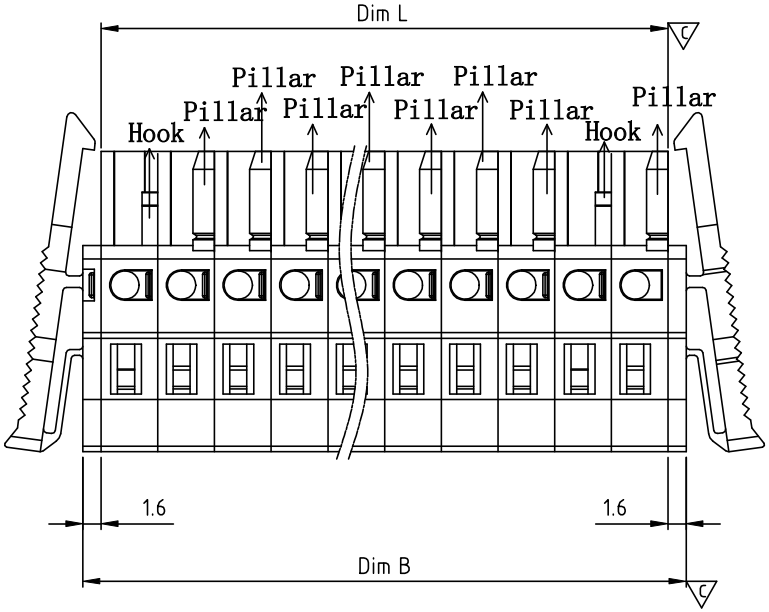

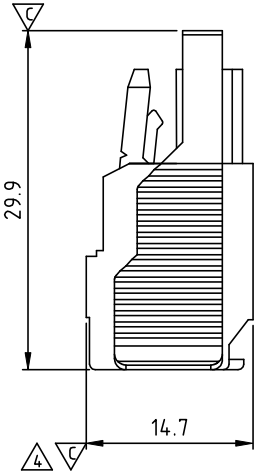

Material:

- Item 1 Female contact :PhBz Tin plated
- Item 2 Spring Clamp: Stainless steel
- Item 3 Terminal housing (With hook) :Thermoplastic (UL94V-0)
- Item 4 Terminal housing (With Pillar) :Thermoplastic (UL94V-0)
- Item 5 Terminal(Left latch cover): Thermoplastic (UL94V-0)
- Item 6 Terminal(Right latch cover): Thermoplastic (UL94V-0)

Electrical: cULus

- Voltage rating: 300 V
- 6 Current rating: 15 A
- Wire range:
- Solid wire(AWG): 12-28
- Stranded wire(AWG): 12-28
- Wire strip length: 8-9mm
- Withstanding Voltage: 1.6KV
- Operating temperature: -40°C to +115°C
- 3 Safety approval : c UL us
- Critical dimension: C

HI xx 0 0 x 3 xxxx G

No. OF POLES
02: 2 POLES
⋮
24: 24 POLES

6 Body Color
0 Black (RAL9005)
2 Red (RAL3001/D)
3 Orange(RAL2011/P)
4 Yellow(RAL1018/A)
5 Green(RAL6018/T)
6 Blue (RAL5015/A)
1 8 Grey(RAL7035/D)
9 White(RAL1102)
C Green(RAL6018/U)

RoHS compliant (lead<4%) 5
In copper Alloy

0000: "@" Logo (Standard)
(Steel screw plating Cr)
000A: "ANYTEK" Mark
Any special item by customer requst. please contact sales department.

Layout of Hook and Pillar:

2

2P	Hook+Pillar
3P	Hook+Hook+Pillar
4P	Hook+Pillar+Hook+Pillar
5P	Hook+Pillar+Pillar+Hook+Pillar
5P over	Hook+Pillar+...+Pillar+Hook+Pillar

DIM		TOL				
		2P	3P-6P	7P-12P	13P-18P	19P-24P
Dim L	N×5.0	±0.05	±0.15	±0.20	±0.30	±0.40
Dim P	(N-1)×5.0	±0.05	±0.15	±0.20	±0.30	±0.40
Dim B	N×5.0+3.2	±0.05	±0.15	±0.20	±0.30	±0.40

ANYTEK

CUSTOMER COPY

ALL RIGHTS RESERVED. REPRODUCTION OR ISSUE TO THIRD PARTIES IN ANY FORM WHATEVER IS NOT PERMITTED WITHOUT WRITTEN AUTHORITY FROM THE PROPRIETOR. PROPERTY OF ANYTEK TECHNOLOGY CO., LTD

TITLE	HI 5.0mm -Double Cover (With Latch) Series					
PART NO.	HIxx00x3xxxxG			DWG NO.	8HI0401	
APPROVED	CHECKED	DESIGNED	DRAWN	CUST NO.		Tolerance
		Dacheng 2013.10.16	Dacheng 2013.10.16		UNIT: mm	X. ±0.50
					SCALE: NONE	X.X ±0.30
				SHEET: 01/01	REV.: H	X.XX ±0.10
						X° ±1°